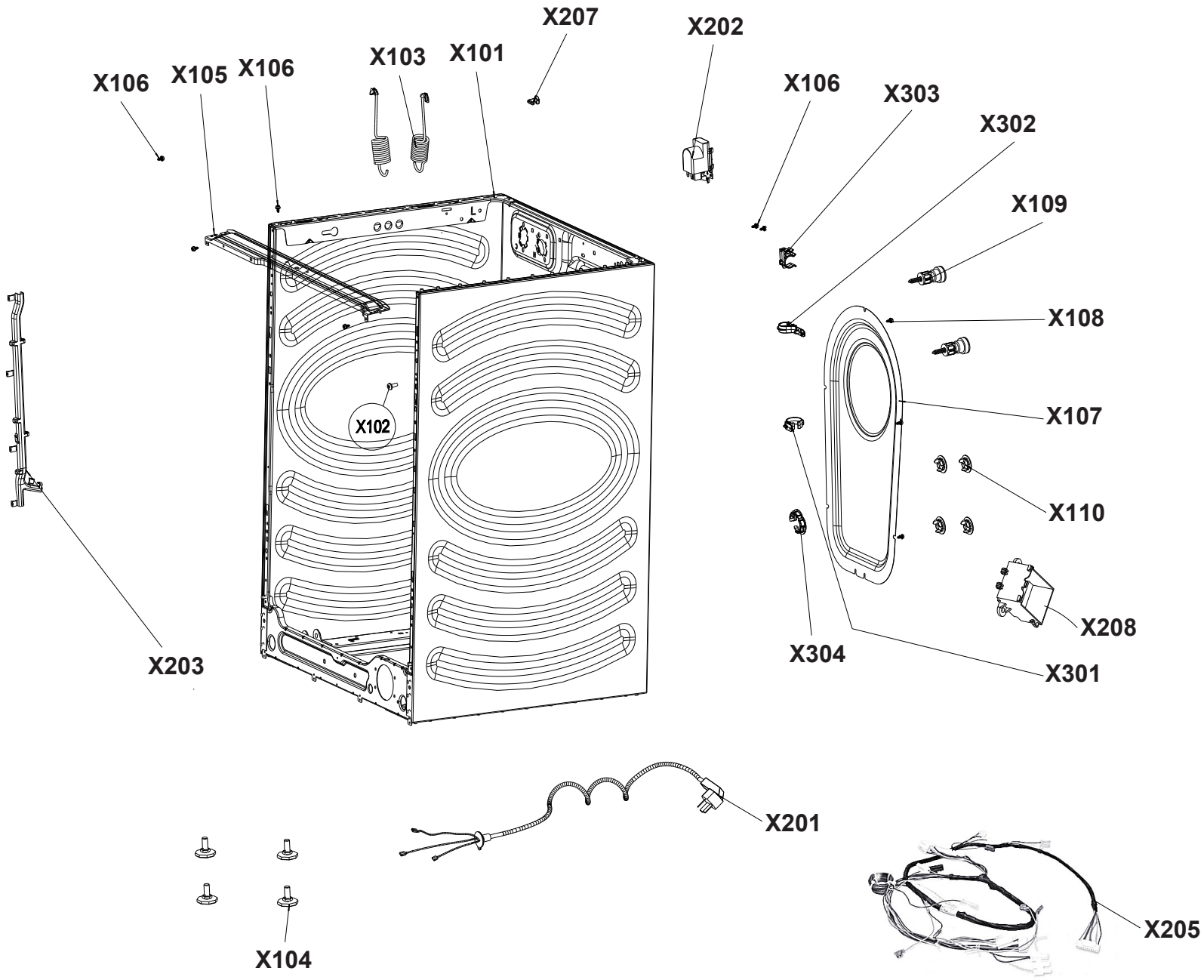
X207
X202
X106
X105
X106
X103
X101
X106
X303
X302
X109
X108
X107
X110
X208
X304
X301
X102
X203
X201
X104
X205

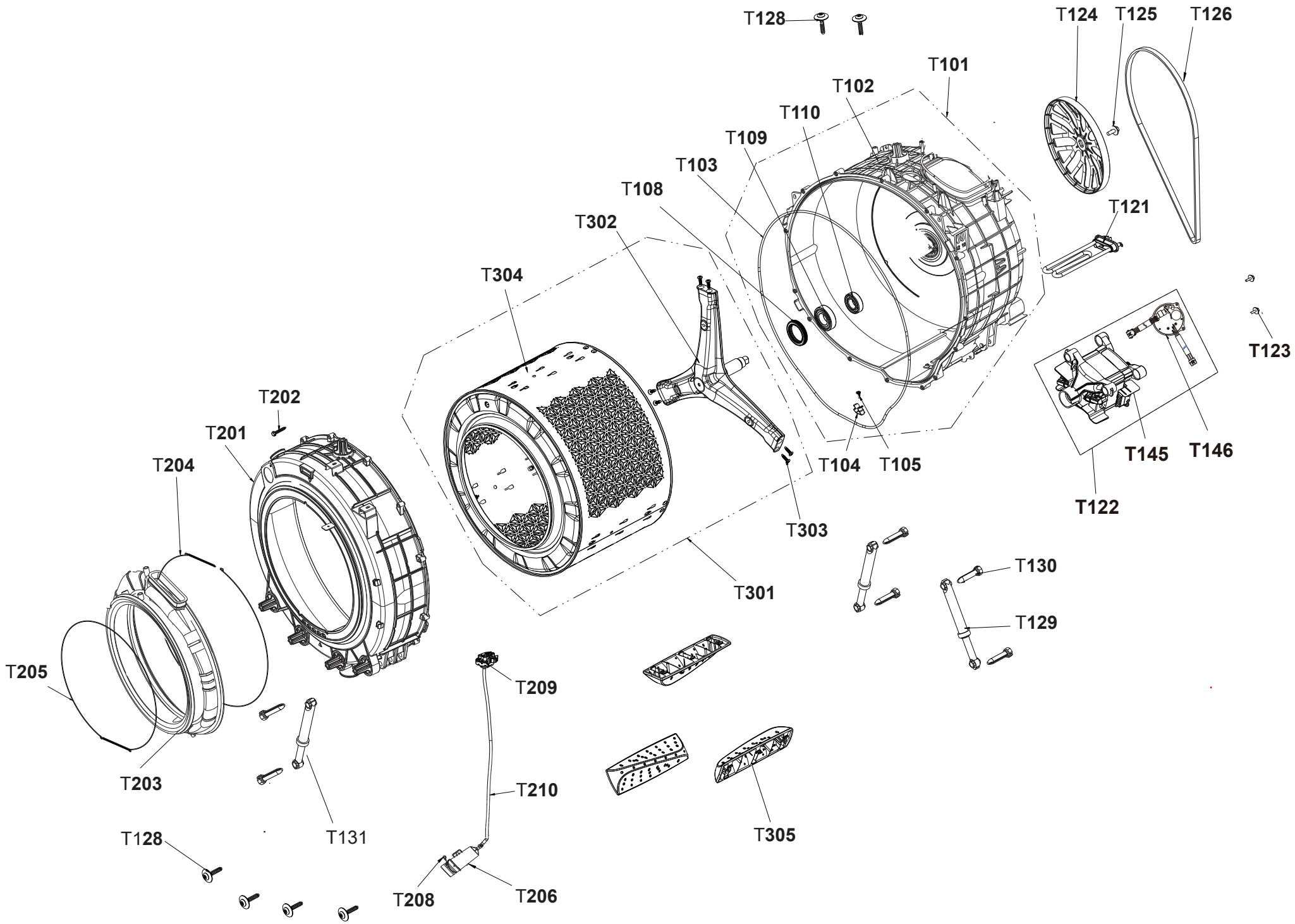
T128
T124
T125
T126
T101
T102
T110
T109
T103
T108
T302
T121
T304
T123
T202
T201
T204
T104
T105
T145
T146
T122
T303
T130
T301
T129
T205
T209
T203
T210
T131
T305
T128
T208
T206

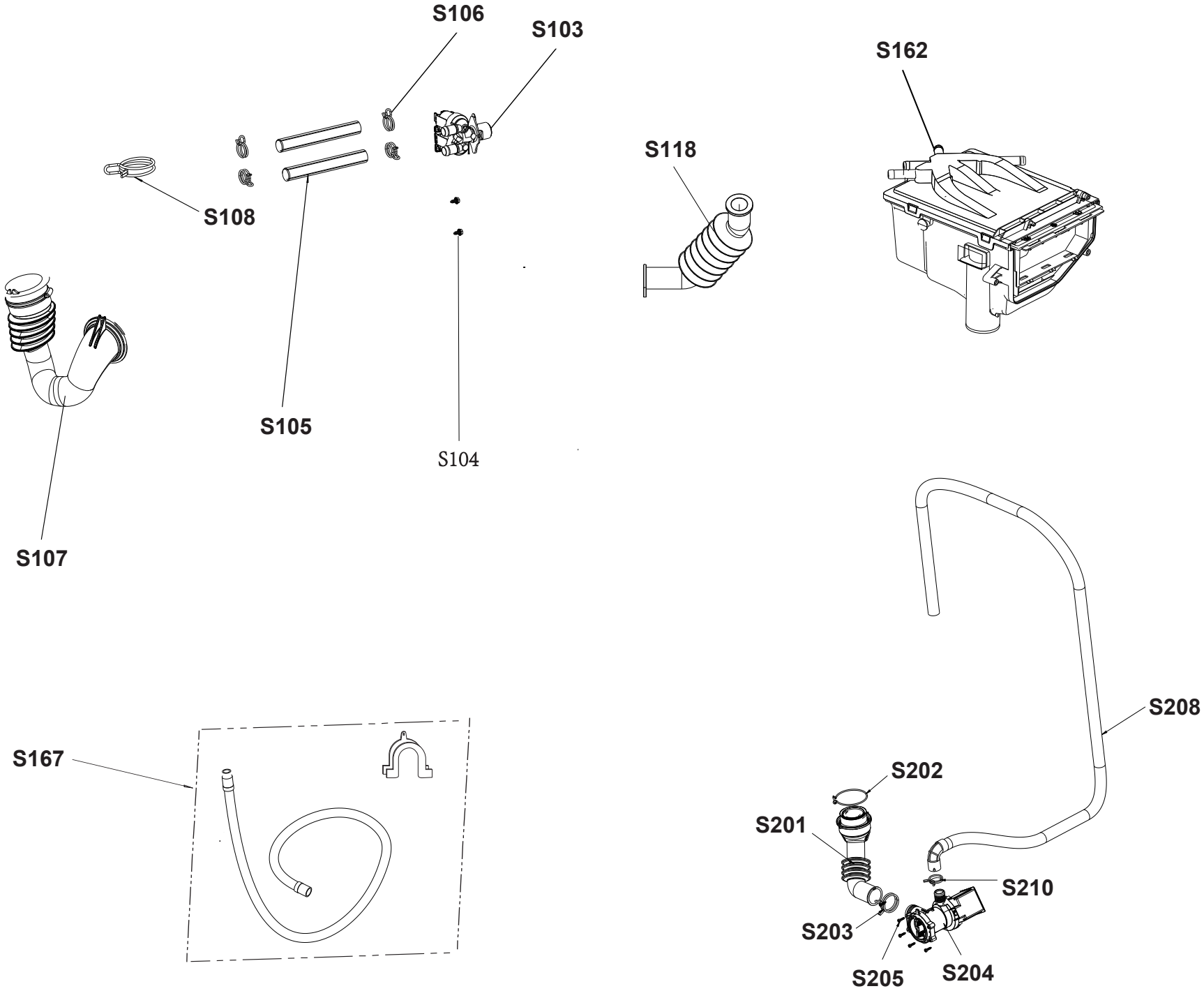
S106
S103
S162
S118
S108
S105
S104
S107
S208
S167
S202
S201
S210
S203
S205
S204

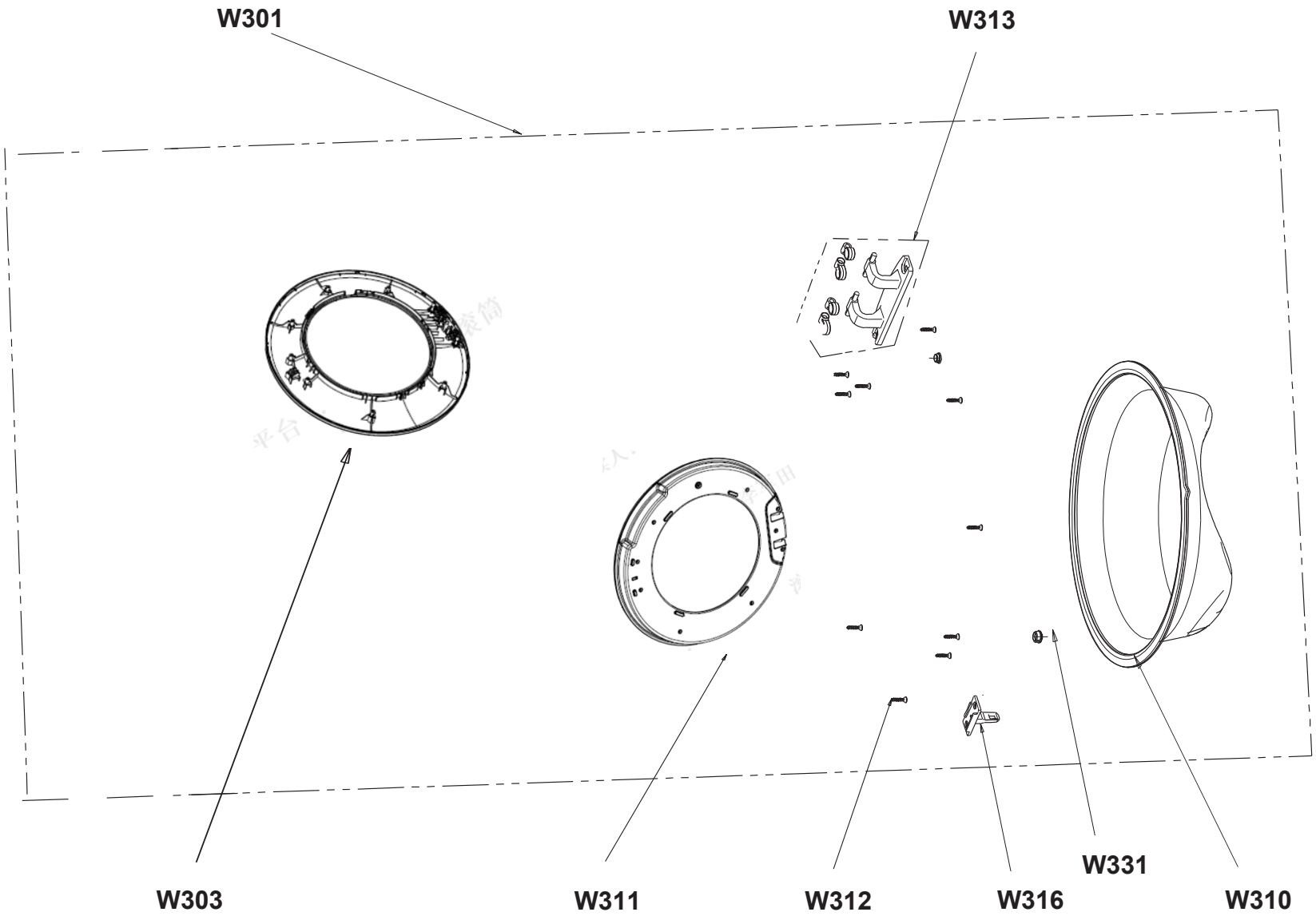
W301
W313
W303
W311
W312
W316
W331
W310

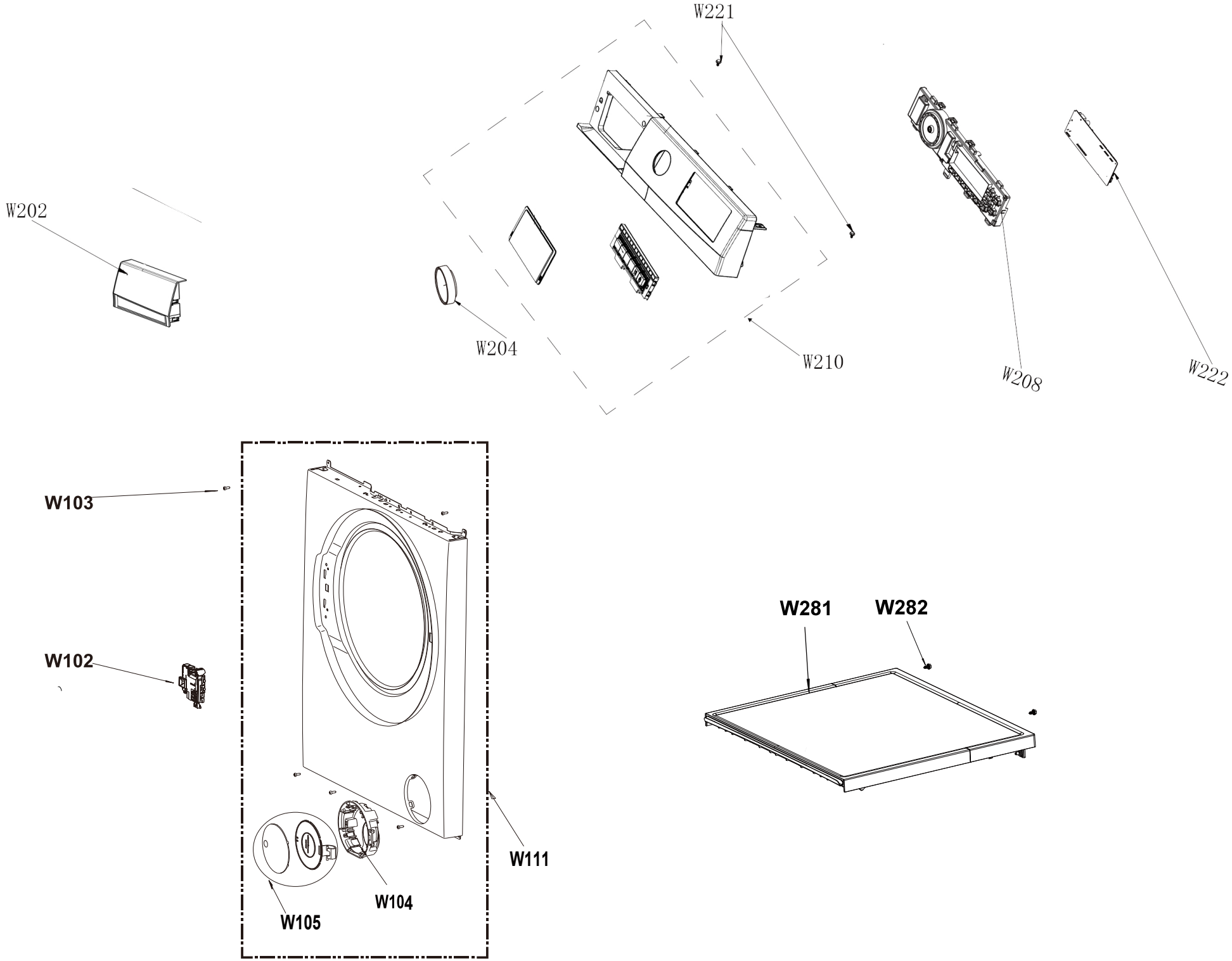
W221
W202
W204
W210
W208
W222
W103
W102
W111
W104
W105
W281
W282