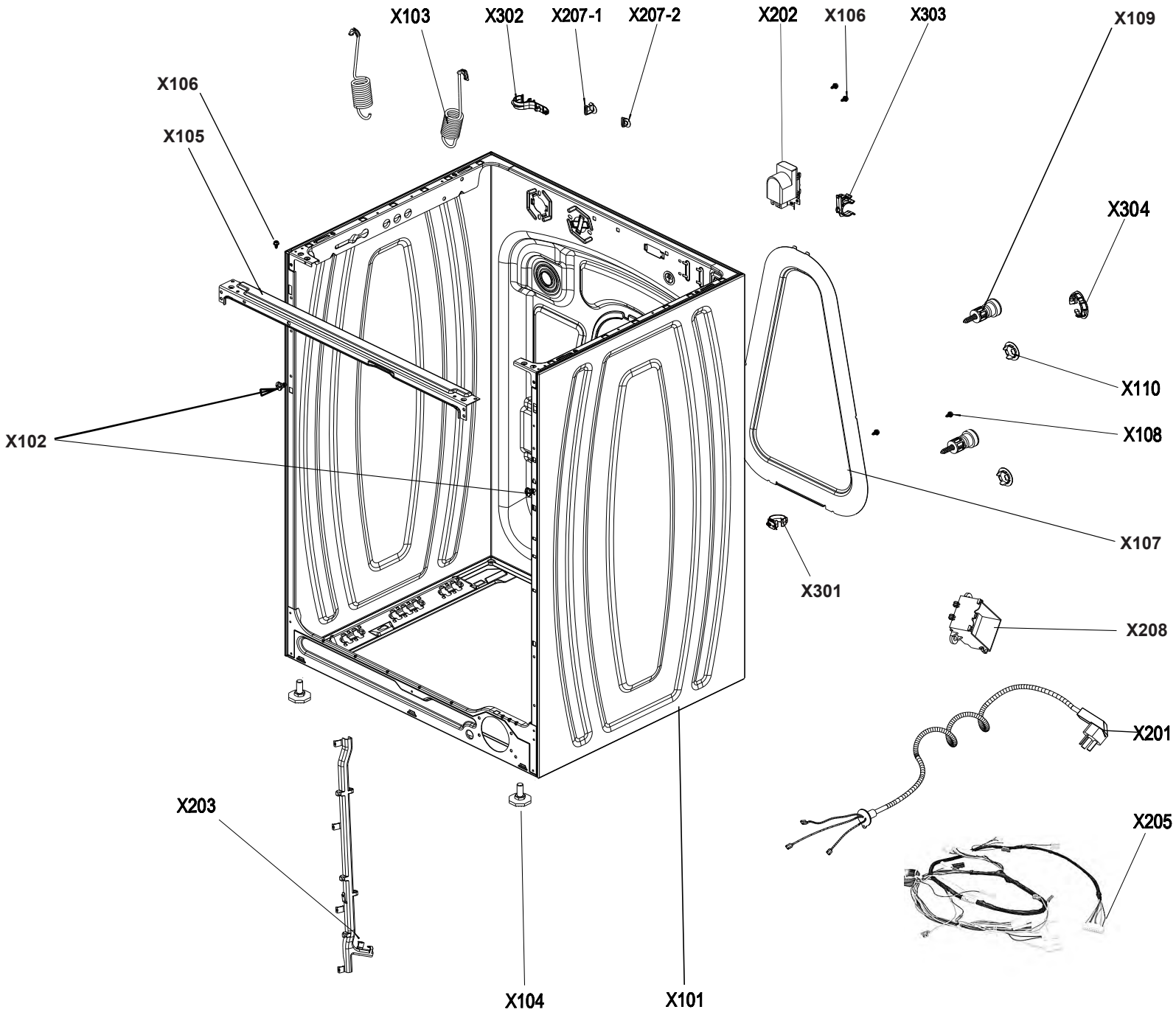
X103
X302
X207-1
X207-2
X202
X106
X303
X109
X106
X105
X304
X110
X108
X102
X107
X301
X208
X201
X203
X205
X104
X101

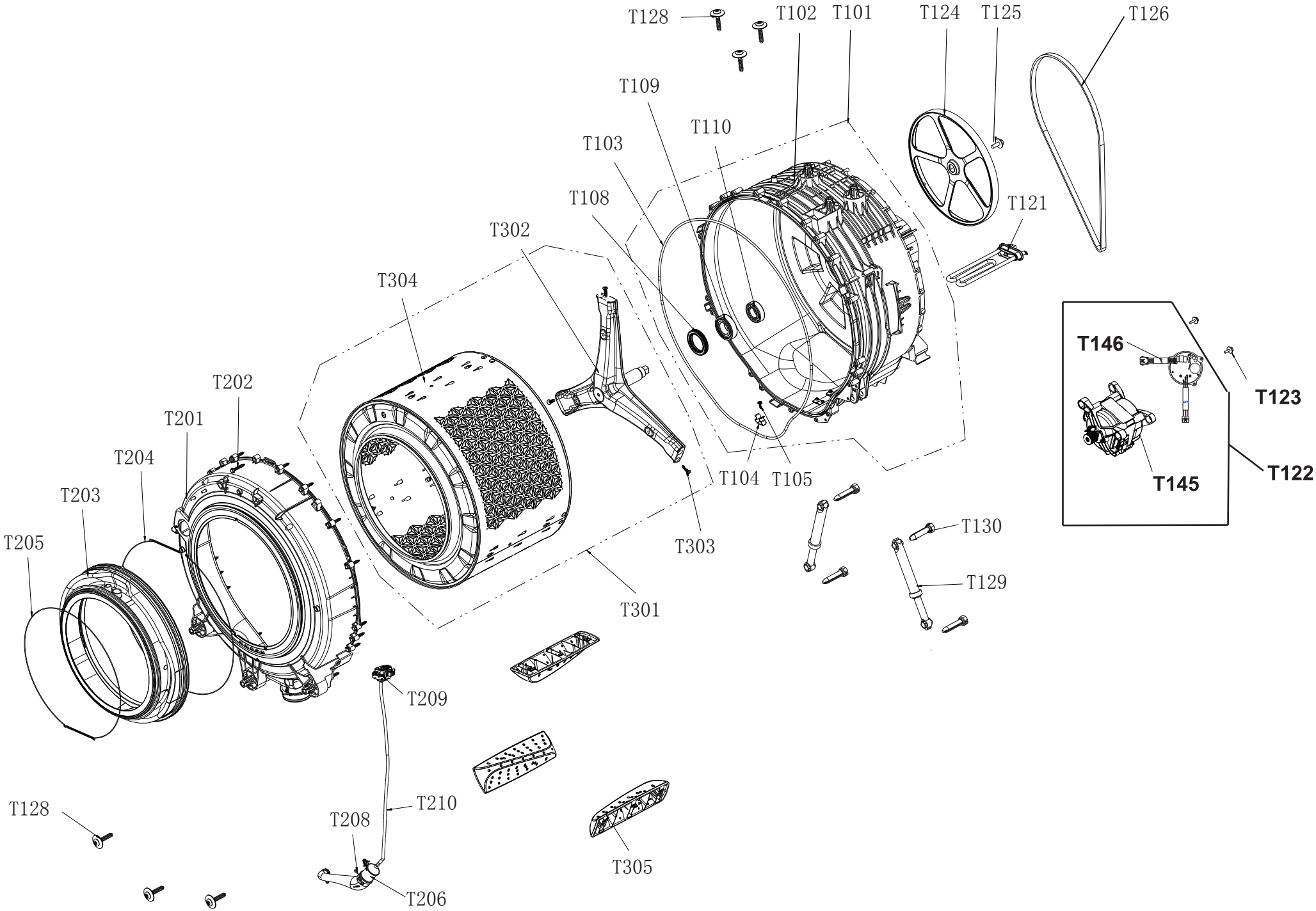
T128
T102
T101
T124
T125
T126
T109
T110
T103
T108
T121
T302
T304
T146
T123
T202
T201
T204
T203
T205
T104
T105
T145
T122
T130
T303
T129
T301
T209
T210
T128
T208
T305
T206

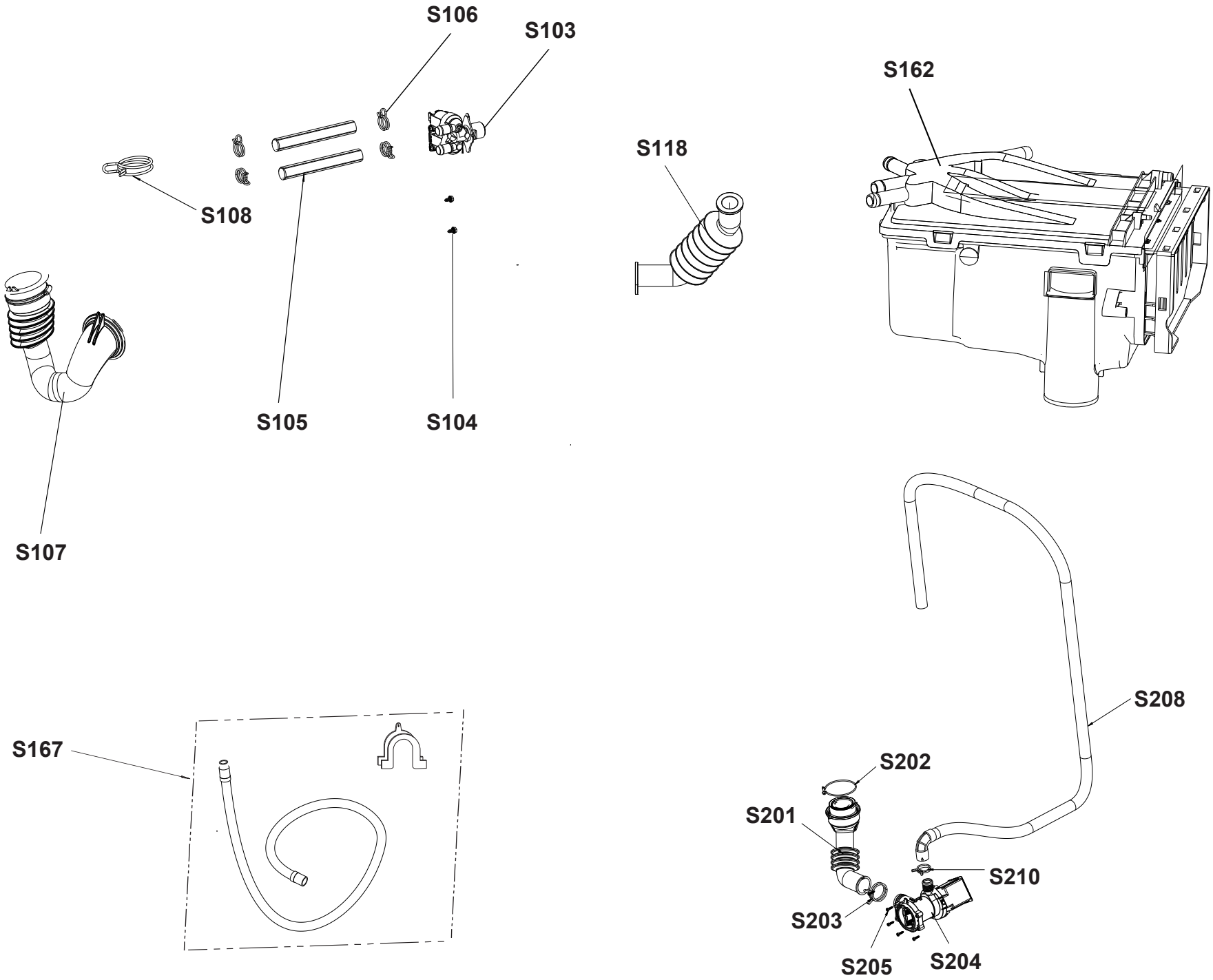
S106
S103
S162
S118
S108
S105
S104
S107
S208
S167
S202
S201
S210
S203
S205
S204

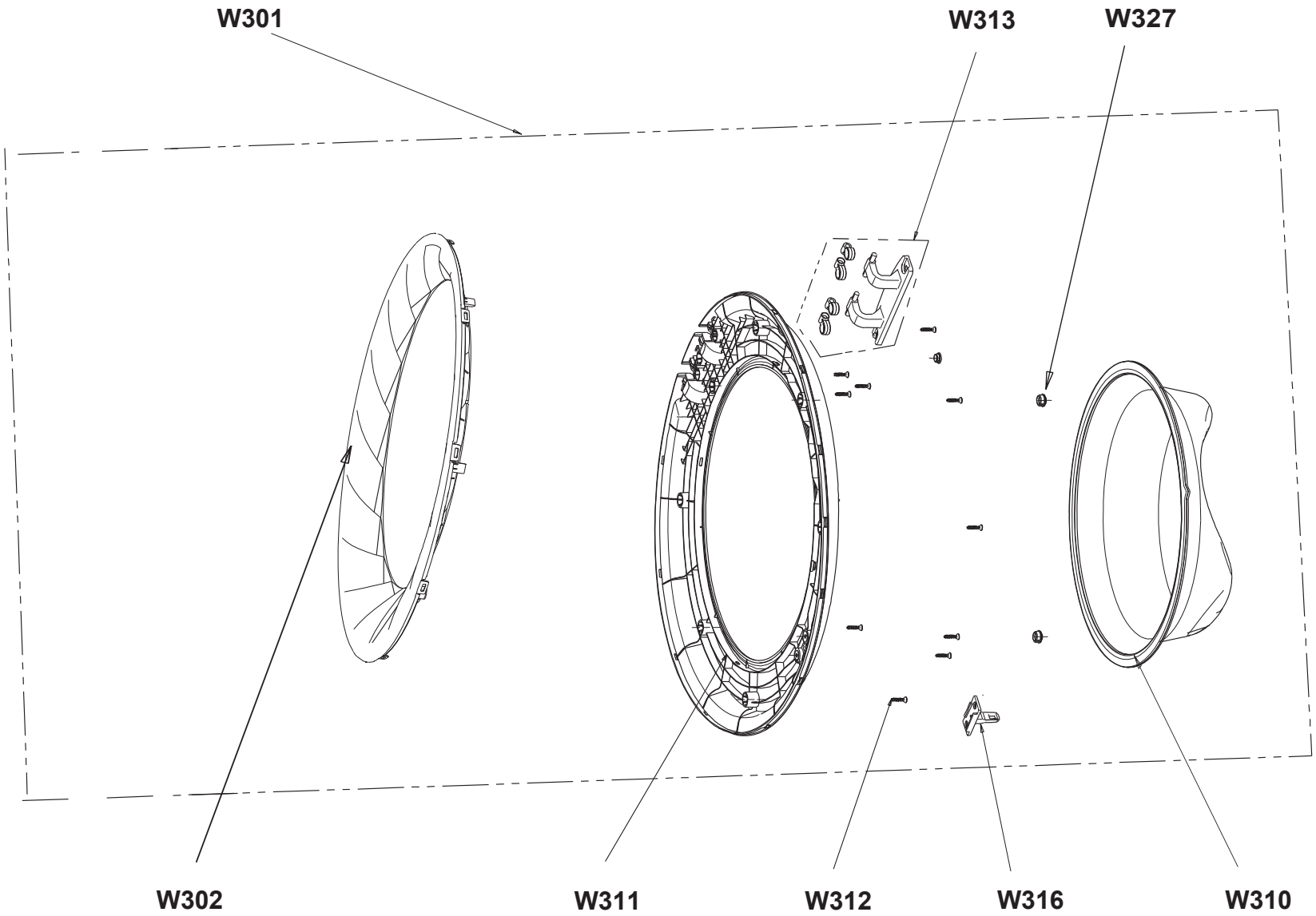
W301
W313
W327
W302
W311
W312
W316
W310

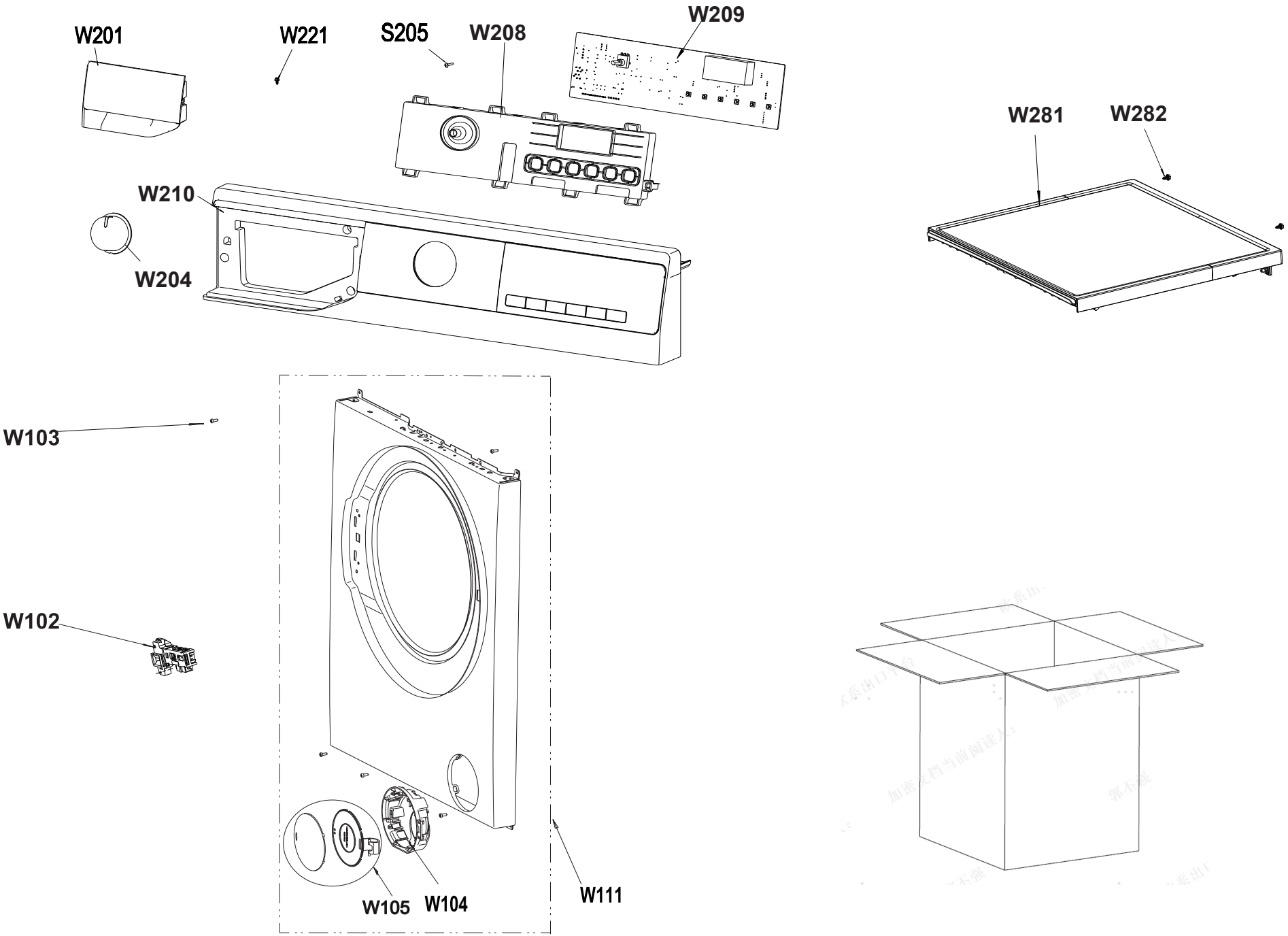
W201
W221
S205
W208
W209
W281
W282
W210
W204
W103
W102
W105
W104
W111